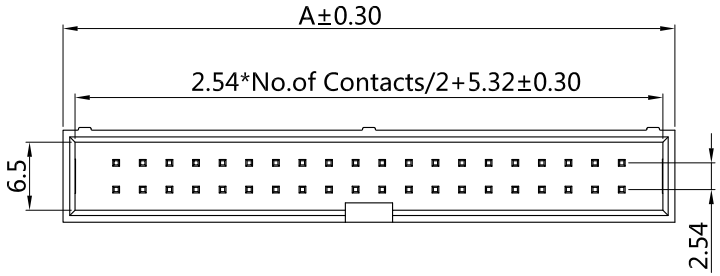

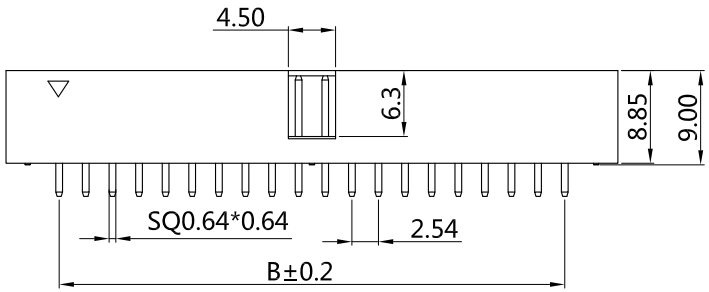

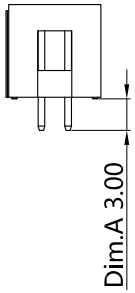

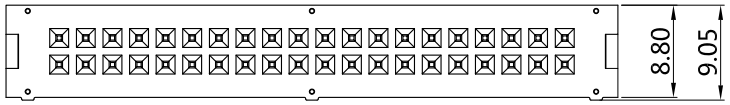

PIN	A(mm)	B(mm)
6P	15.24	5.08
8P	17.78	7.62
10P	20.32	10.16
12P	22.86	12.70
14P	25.40	15.24
16P	27.94	17.78
18P	30.48	20.32
20P	33.02	22.86
22P	35.56	25.40
24P	38.10	27.94
26P	40.64	30.48
28P	43.18	33.02
30P	45.72	35.56
32P	48.26	38.1
34P	50.80	40.64
36P	53.34	43.18
40P	58.42	48.26
44P	63.50	53.34
50P	71.12	60.96
60P	83.82	73.66
64P	88.90	78.74

Above number of producible pins

Current Rating: 3 Amps
Insulator Resistance: 1000 Megohms min
Contact Resistance: 20m ohms max.
Dielectric Withstanding: AC 500 V
Operating Temperature: - 40° ~ +105°
Contact Material: Copper Alloy
Insulator Material: Polyester,UL 94V-0
Standard: PBT
Finish: Gold Plated or Duplex Plated
Standard: Gold Flash all over
Note:
Duplex Plating: Gold Plated on contact area,
Tin on solder area
Insulator Material: Polyester,UL 94V-0
Standard: Nylon-6T
Max Processing Temp: 230°C for 60 seconds
Max Processing Temp: 260°C for 10 seconds

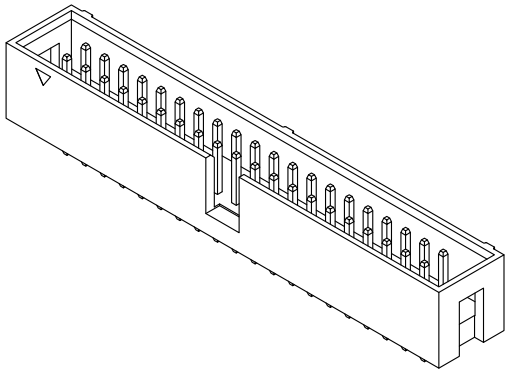

Recommended P.C. Board
SMD Layout

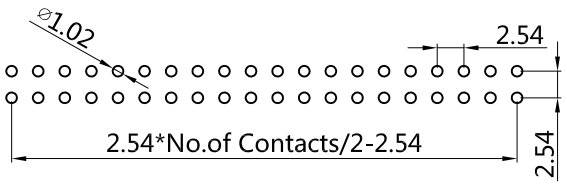

(RoHS Compliant)

BH11 X - XX S0 BK X 000 X
1 2 3 4 5 6 7

1. Insultator material:
A=PBT N=PA6T
P=PA9T
2. Circuits: 24PIN
3. Taill Style:
S0=180°
4. Color:
BK=Black
BL:=Blue

5. Contact Plated:
T=Matte Tin over Nickel
W=Matte Tin over nickel 150μ"
Y=Bright Tin over Nickel
F= Gold Flash, Matte Tin 100μ"
A=Gold 3μ"
B=Gold 3μ" , Matte Tin 100μ"
C = ordinary gold plating
D= Gold 5μ"
D= Gold 5μ"
I=Gold 1μ" ,
G=Gold 10μ"
J=Gold 10μ" , Matte Tin 100μ"
L= Gold 15μ"
M=Gold 15μ" , Matte Tin 100μ"
U= Gold 30μ"
V=Gold 30μ" Matte Tin 100μ"

6.Special Options

7. Packing:
A=Bag
B=Tube
C=Tray
E=Cap+Reel
F=Cap+tube
G=Cap+tray
H=Cap+bag
N=Tap&reel

东莞市震升电子有限公司 DONG GUAN ZHEN SHENG ELECTRONICS CO., LTD	PART NO.	BH11X-XXS0BKX000X		.X ±0.30	.XX ±0.20	.XXX ±0.1
BOM 1:BH22N-XXBKH0C2	DRAWING NO	ZS-00020-J	EDITION:A1	ITEM: BH11	
BOM 2:SQ0.50-11.50-X-C12	DRAWN BY	Deng jin quan	2022-11-30	SCALE:1:1	
BOM 3:	APPROVAL BY	Chen xiao guang	2022-12-01	UNIT:M.M	
TEL:0769-85305015 FAX:0769-85845060					